SX03M-en1

Lenze

EN **Operating Instructions**


V0004

***smd*** *- frequency inverter*

*0.25 kW… 4.0 kW*

This document printed in the United States

# Contents

# About these instructions

This documentation applies to the smd frequency inverter, and contains important technical data and describes installation, operation, and commissioning.

These instructions are only valid for smd frequency inverters with software rev 20 (see drive nameplate).

Please read the instructions before commissioning.

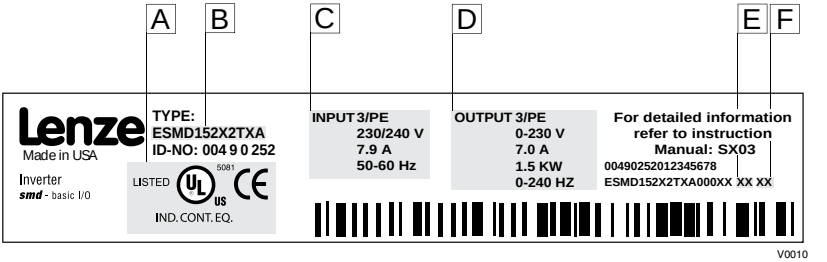


A Certifications
B Type
C Input Ratings
D Output Ratings
E Hardware Version
F Software Version

| Scope of delivery | Important |
|---|---|
| • 1 ***smd*** inverter (ESMD...) with EPM installed (see Section 4.2)<br>• 1 Operating Instructions | After receipt of the delivery, check immediately whether the items delivered match the accompanying papers. Lenze does not accept any liability for deficiencies claimed subsequently.<br>**Claim**<br>• visible transport damage immediately to the forwarder.<br>• visible deficiencies/incompleteness immediately to your Lenze representative. |

# 1 Safety information

## General

Some parts of Lenze controllers (frequency inverters, servo inverters, DC controllers) can be live, moving and rotating. Some surfaces can be hot.
Non-authorized removal of the required cover, inappropriate use, and incorrect installation or operation creates the risk of severe injury to personnel or damage to equipment.
All operations concerning transport, installation, and commissioning as well as maintenance must be carried out by qualified, skilled personnel (IEC 364 and CENELEC HD 384 or DIN VDE 0100 and IEC report 664 or DIN VDE0110 and national regulations for the prevention of accidents must be observed).
According to this basic safety information, qualified skilled personnel are persons who are familiar with the installation, assembly, commissioning, and operation of the product and who have the qualifications necessary for their occupation.

## Application as directed

Drive controllers are components which are designed for installation in electrical systems or machinery. They are not to be used as appliances. They are intended exclusively for professional and commercial purposes according to EN 61000-3-2. The documentation includes information on compliance with the EN 61000-3-2.
When installing the drive controllers in machines, commissioning (i.e. the starting of operation as directed) is prohibited until it is proven that the machine complies with the regulations of the EC Directive 98/37/EC (Machinery Directive); EN 60204 must be observed.
Commissioning (i.e. starting of operation as directed) is only allowed when there is compliance with the EMC Directive (2004/108/EEC).
The drive controllers meet the requirements of the Low Voltage Directive 2006/95/EEC. The harmonised standards of the series EN 50178/DIN VDE 0160 apply to the controllers.
**Note:** The availability of controllers is restricted according to EN 61800-3.These products can cause radio interference in residential areas. In this case, special measures can be necessary.

## Installation

Ensure proper handling and avoid excessive mechanical stress. Do not bend any components and do not change any insulation distances during transport or handling. Do not touch any electronic components and contacts.
Controllers contain electrostatically sensitive components, which can easily be damaged by inappropriate handling. Do not damage or destroy any electrical components since this might endanger your health!

## Electrical connection

When working on live drive controllers, applicable national regulations for the prevention of accidents (e.g. VBG 4) must be observed.
The electrical installation must be carried out according to the appropriate regulations (e.g. cable cross-sections, fuses, PE connection). Additional information can be obtained from the documentation.
The documentation contains information about installation in compliance with EMC (shielding, grounding, filters and cables). These notes must also be observed for CE-marked controllers.
The manufacturer of the system or machine is responsible for compliance with the required limit values demanded by EMC legislation.

### Operation

Systems including controllers must be equipped with additional monitoring and protection devices according to the corresponding standards (e.g. technical equipment, regulations for prevention of accidents, etc.). You are allowed to adapt the controller to your application as described in the documentation.

**DANGER!**

- After the controller has been disconnected from the supply voltage, live components and power connection must not be touched immediately, since capacitors could be charged. Please observe the corresponding notes on the controller.
- Do not continuously cycle input power to the controller more than once every 3 minutes.
- Please close all protective covers and doors during operation.

### Note for UL approved system with integrated controllers

UL warnings are notes which apply to UL systems. The documentation contains special information about UL.

**Warnings!**

- Suitable for use on a circuit capable of delivering not more than 5000 rms symmetrical amperes, 240 V maximum (240 V devices) or 500 V maximum (400/500 V devices) respectively
- Use minimum 75 °C copper wire only.
- Shall be installed in a pollution degree 2 macro-environment.

## 1.1 Pictographs used in these instructions

| Pictograph | Signal word | Meaning | Consequences if ignored |
|---|---|---|---|
| | **DANGER!** | Warning of Hazardous Electrical Voltage. | Reference to an imminent danger that may result in death or serious personal injury if the corresponding measures are not taken. |
| | **WARNING!** | Impending or possible danger for persons | Death or injury |
| STOP | **STOP!** | Possible damage to equipment | Damage to drive system or its surroundings |
| | **Note** | Useful tip: If observed, it will make using the drive easier | |

# 2 Technical data

## 2.1 Standards and application conditions

| | | |
|---|---|---|
| **Conformity** | CE | Low Voltage (2006/95/EC) & EMC (2004/108/EC) Directives |
| **Approvals** | UL 508C | Underwriters Laboratories - Power Conversion Equipment |
| **Max. permissible motor cable length** (1) | shielded: | 50 m (low-capacitance) |
| | unshielded: | 100 m |
| **Input voltage phase imbalance** | ≤ 2% | |
| **Humidity** | ≤ 95% non-condensing | |
| **Output frequency** | 0...500 Hz | |
| **Environmental conditions** | Class 3K3 to EN 50178 | |
| **Temperature range** | Transport | -25 … +70 °C |
| | Storage | -20 … +70 °C |
| | Operation | 0 … +55 °C (with 2.5 %/°C current derating above +40 °C) |
| **Installation height** | 0 … 4000 m a.m.s.l. (with 5 %/1000 m current derating above 1000 m a.m.s.l.) | |
| **Vibration resistance** | acceleration resistant up to 0.7 g 10... 150Hz | |
| ⚠ **Earth leakage current** | > 3.5 mA to PE | |
| **Enclosure (EN 60529)** | IP 20 | |
| **Protection measures against** | short circuit, earth fault, overvoltage, motor stalling, motor overload | |
| **Operation in public supply networks (Limitation of harmonic currents according to EN 61000-3-2)** | Total power connected to the mains | Compliance with the requirements (2) |
| | < 0.5 kW | With mains choke |
| | 0.5 … 1 kW | With active filter (in preparation) |
| | > 1 kW | Without additional measures |

(1) For compliance with EMC regulations, the permissible cable lengths may change.
(2) The additional measures described only ensure that the controllers meet the requirements of the EN 61000-3-2.
The machine/system manufacturer is responsible for the compliance with the regulations of the machine!

## 2.2 Ratings

| Type | Power [kW] | Mains | | Output Current | | | |
|---|---|---|---|---|---|---|---|
| | | Voltage, frequency | Current [A] | $I_r$ | | $I_{max}$ for 60 s | |
| | | | | [A](1) | [A](2) | [A](1) | [A](2) |
| ESMD251X2SFA | 0.25 | **1/N/PE 230/240 V**<br>**2/PE 230/240 V**<br>(180 V - 0% … 264 V + 0 %)<br>50/60 Hz<br>(48 Hz - 0 % … 62 Hz + 0 %) | 3.4 | 1.7 | 1.6 | 2.6 | 2.4 |
| ESMD371X2SFA | 0.37 | | 5.0 | 2.4 | 2.2 | 3.6 | 3.3 |
| ESMD551X2SFA | 0.55 | | 6.0 | 3.0 | 2.8 | 4.5 | 4.2 |
| ESMD751X2SFA | 0.75 | | 9.0 | 4.0 | 3.7 | 6.0 | 5.5 |
| ESMD152X2SFA | 1.5 | | 14.0 | 7.0 | 6.4 | 10.5 | 9.6 |
| ESMD222X2SFA | 2.2 | | 21.0 | 9.5 | 8.7 | 14.3 | 13.1 |
| ESMD371X2TXA | 0.37 | **3/PE 230/240 V**<br>(180 V - 0% … 264 V + 0 %)<br>50/60 Hz<br>(48 Hz - 0 % … 62 Hz + 0 %) | 2.7 | 2.4 | 2.2 | 3.6 | 3.3 |
| ESMD751X2TXA | 0.75 | | 5.1 | 4.2 | 3.9 | 6.3 | 5.9 |
| ESMD112X2TXA | 1.1 | | 6.9 | 6.0 | 5.5 | 9.0 | 8.3 |
| ESMD152X2TXA | 1.5 | | 7.9 | 7.0 | 6.4 | 10.5 | 9.6 |
| ESMD222X2TXA | 2.2 | | 11.0 | 9.6 | 8.8 | 14.4 | 13.2 |
| ESMD302X2TXA | 3.0 | | 13.5 | 12.0 | 11.0 | 18.0 | 16.5 |
| ESMD402X2TXA | 4.0 | | 17.1 | 15.2 | 14.0 | 22.8 | 21.0 |

(1) For rated mains voltage and carrier frequencies 4, 6, 8 kHz
(2) For rated mains voltage and carrier frequency 10 kHz

# 3 Installation

## 3.1 Mechanical installation

### 3.1.1 Dimensions and mounting

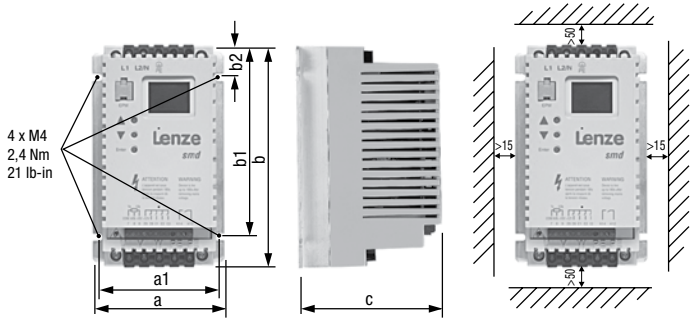


| Type | a [mm] | a1 [mm] | b [mm] | b1 [mm] | b2 [mm] | c [mm] | m [kg] |
|---|---|---|---|---|---|---|---|
| ESMD251X2SFA | 93 | 84 | 146 | 128 | 17 | 83 | 0.5 |
| ESMD371X2SFA | | | | | | | |
| ESMD551X2SFA | 93 | 84 | 146 | 128 | 17 | 92 | 0.6 |
| ESMD751X2SFA | | | | | | | |
| ESMD152X2SFA | 114 | 105 | 146 | 128 | 17 | 124 | 1.2 |
| ESMD222X2SFA | 114 | 105 | 146 | 128 | 17 | 140 | 1.4 |
| ESMD371X2TXA | 93 | 84 | 146 | 128 | 17 | 83 | 0.5 |
| ESMD751X2TXA | 93 | 84 | 146 | 128 | 17 | 92 | 0.6 |
| ESMD112X2TXA | 93 | 84 | 146 | 128 | 17 | 141 | 1.2 |
| ESMD152X2TXA | | | | | | | |
| ESMD222X2TXA | 114 | 105 | 146 | 128 | 17 | 140 | 1.4 |
| ESMD302X2TXA | 114 | 105 | 146 | 128 | 17 | 171 | 1.9 |
| ESMD402X2TXA | 114 | 105 | 146 | 100 | 17 | 171 | 1.7 |

**WARNING!**
Drives must not be installed where subjected to adverse environmental conditions such as: combustible, oily, or hazardous vapors or dust; excessive moisture; excessive vibration or excessive temperatures. Contact Lenze for more information.

## 3.2 Electrical installation

### 3.2.1 Installation according to EMC requirements

EMC
Compliance with EN 61800-3/A11

Noise emission
Compliance with limit value class A according to EN 55011 if installed in a control cabinet with the appropriate footprint filter and the motor cable length does not exceed 10m

A Screen clamps

B Control cable

C Low-capacitance motor cable
(core/core ≤ 75 pF/m, core/screen ≤ 150 pF/m)

D Electrically conductive mounting plate

E Filter (if required)

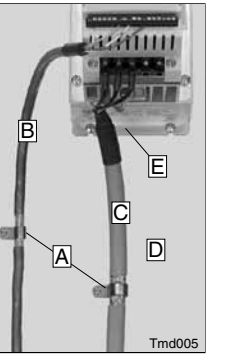


### 3.2.2 Fuses/cable cross-sections (1)

| Type | Recommendations | | | | | E.l.c.b.(2) |
|---|---|---|---|---|---|---|
| | Fuse | Miniature circuit breaker(5) | Fuse (3) or Breaker(6) | Input Power Wiring (L1, L2/N, L3, PE) | | |
| | | | (N. America) | [mm²] | [AWG] | |
| ESMD251X2SFA … ESMD551X2SFA<br>ESMD371X2TXA … ESMD112X2TXA | M10 A | C10 A | 10 A | 2.5 | 14 | ≥ 30 mA |
| ESMD152X2TXA | M16 A | C16 A | 12 A | 2.5 | 14 | |
| ESMD751X2SFA, ESMD222X2TXA | M16 A | C16 A | 15 A | 2.5 | 14 | |
| ESMD152X2SFA, ESMD302X2TXA | M20 A | C20 A | 20 A | 4 (4) | 12 | |
| ESMD222X2SFA, ESMD402X2TXA | M25 A | C25 A | 25 A | 6 (4) | 10 | |

(1) Observe the applicable local regulations.
(2) Pulse-current or universal-current sensitive earth leakage circuit breaker.
(3) UL Class CC or T fast-acting current-limiting type fuses, 200,000 AIC, required. Bussman KTK-R, JJN, JJS or equivalent.
(4) Connection without end ferrules or with attached pin end connectors.
(5) Installations with high fault current due to large supply mains may require a type D circuit breaker.
(6) Thermomagnetic type breakers preferred.

**Observe the following when using E.l.c.b:**

- Installation of E.l.c.b only between supplying mains and controller.
- The E.l.c.b can be activated by:
  - capacitive leakage currents between the cable screens during operation (especially with long, screened motor cables)
  - connecting several controllers to the mains at the same time
  - RFI filters

## 3.2.3 Connection diagram

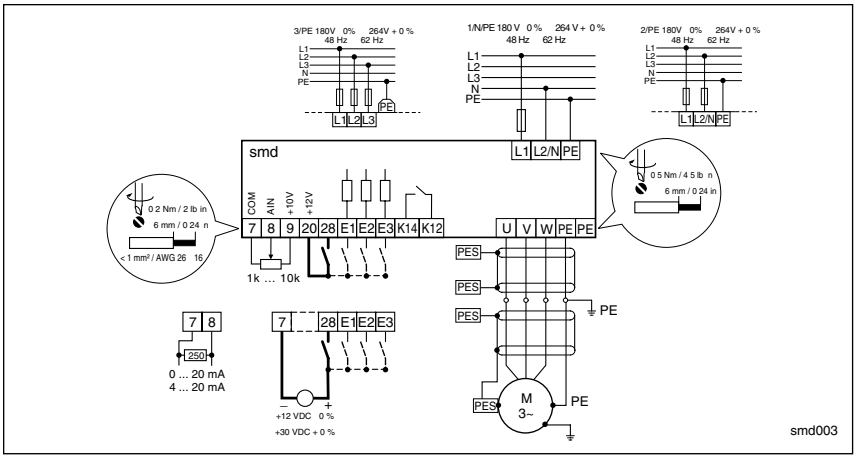


**DANGER!**

- Hazard of electrical shock! Circuit potentials are up to 240 VAC above earth ground. Capacitors retain charge after power is removed. Disconnect power and wait until the voltage between B+ and B- is 0 VDC before servicing the drive.
- Do not connect mains power to the output terminals (U,V,W)! Severe damage to the drive will result.
- Do not cycle mains power more than once every three minutes. Damage to the drive will result.

**STOP!**

If the kVA rating of the AC supply transformer is greater than 10 times the input kVA rating of the drive(s), an isolation transformer or 2-3% input line reactor must be added to the line side of the drive(s).

## 3.2.4 Control terminals

| Terminal | **Data for control connections** (printed in bold = Lenze setting) | | |
|---|---|---|---|
| **7** | Reference potential | | |
| **8** | Analog input<br>**0 … 10 V** (changeable under C34) | input resistance: >50 kΩ<br>(with current signal: 250 Ω) | |
| **9** | Internal DC supply for setpoint potentiometer | +10 V, max. 10 mA | |
| **20** | Internal DC supply for digital inputs | +12 V, max. 20 mA | |
| **28** | Digital input Start/Stop | LOW = Stop<br>HIGH = Run Enable | $R_i$ = 3.3 kΩ |
| **E1** | Digital input configurable with CE1<br>**Activate fixed setpoint 1 (JOG1)** | HIGH = JOG1 active | |
| **E2** | Digital input configurable with CE2<br>**Direction of rotation** | LOW = CW rotation<br>HIGH = CCW rotation | |
| **E3** | Digital input configurable with CE3<br>**Activate DC injection brake (DCB)** | HIGH = DCB active | |
| **K12**<br>**K14** | Relay output (normally-open contact)<br>configurable with C08<br>**Fault (TRIP)** | AC 250 V / 3 A<br>DC 24 V / 2 A … 240 V / 0.22 A | |

**Note**
LOW = 0 to +3V, HIGH = +12 to +30V.

**Protection against contact**
- All terminals have basic isolation (single insulating distance)
- Protection against contact can only be ensured by additional measures i.e. double insulation-


# 4 Commissioning

## 4.1 Parameter setting

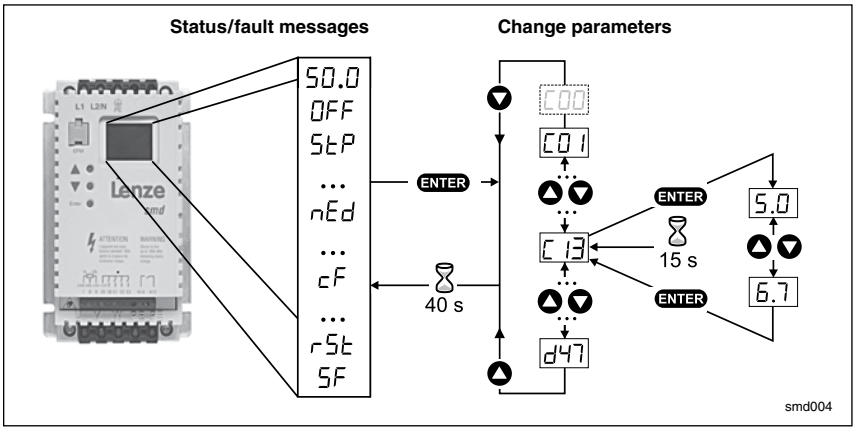


**Note**
If the password function is enabled, the password must be entered into C00 to access the parameters. C00 will not appear unless the password function is enabled. See C94.

## 4.2 Electronic programming module (EPM)

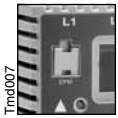


The EPM contains the controller's memory. Whenever parameter settings are changed, the values are stored in the EPM. It can be removed, but must be installed for the controller to operate (a missing EPM will trigger an F I fault). The controller ships with protective tape over the EPM that can be removed after installation.

An optional EPM Programmer (EEPM1RA) is available that allows: the controller to be programmed without power; OEM settings to be default settings; fast copying of EPMs when multiple controllers require identical settings. It can also store up to 60 custom parameter files for even faster controller programming.

## 4.3 Parameter menu

| Code | | Possible Settings | | | IMPORTANT |
|---|---|---|---|---|---|
| No. | Name | Lenze | Selection | | |
| C00 | Password entry | 0 | 0 | 999 | Visible only when password is active (see C94) |
| C01 | Setpoint source | | 0 | Analog input (terminal 8; see C34) | |
| | | | 1 | Code c40 | Observe notes about c40 |
| C02 | Load Lenze setting | | 0 | No action/loading complete | • C02 = 1... 4 only possible with OFF<br>• C02 = 2 : C11, C15 = 60 Hz |
| | | | 1 | Load 50 Hz Lenze settings | |
| | | | 2 | Load 60 Hz Lenze settings | |
| | | | 3 | Load OEM settings | |
| | | | 4 | Translate | |
| | | **WARNING!**<br>C02 = 1... 3 overwrites all settings! TRIP circuitry may be disabled! Check codes CE1...CE3. | | | |
| | | **NOTE**<br>If an EPM that contains data from a previous software version is installed, C02 = 4 converts the data to the current version. | | | |
| CE1 | Configuration - Digital Input E1 | 1 | 1 | Activate fixed setpoint 1 (JOG1) | • Use C37...C39 to adjust fixed setpoints<br>• Activate JOG3: Both terminals = HIGH |
| | | | 2 | Activate fixed setpoint 2 (JOG2) | |
| | | | 3 | DC braking (DCB) | See also C36 |
| | | | 4 | Direction of rotation | LOW = CW rotation<br>HIGH = CCW rotation |
| | | | 5 | Quick stop | Controlled deceleration to standstill, active LOW; Set decel rate in C13 or c03 |
| CE2 | Configuration - Digital Input E2 | 4 | 6 | CW rotation | CW rotation = LOW and CCW rotation = LOW: Quick stop; Open-circuit protected |
| | | | 7 | CCW rotation | |
| | | | 8 | UP (setpoint ramp-up) | UP = LOW and DOWN = LOW: Quick stop; Use momentary NC contacts |
| | | | 9 | DOWN (setpoint ramp-down) | |
| CE3 | Configuration - Digital Input E3 | 3 | 10 | TRIP set | Active LOW, triggers EEr (motor coasts to standstill)<br>**NOTE:** NC thermal contact from the motor can be used to trigger this input |
| | | | 11 | TRIP reset | See also c70 |
| | | | 12 | Accel/decel 2 | See c01 and c03 |
| | | | 13 | Deactivate PI | Disables PI function for manual control |
| | | | 14 | Activate fixed PI setpoint 1 | • Use C37...C39 to adjust fixed setpoints<br>• Activate fixed PI setpoint 3: Both terminals = HIGH |
| | | | 15 | Activate fixed PI setpoint 2 | |
| | | **Note**<br>A CFG fault will occur under the following conditions:<br>• E1...E3 settings are duplicated (each setting can only be used once)<br>• One input is set to UP and another is not set to DOWN, or vice-versa | | | |

| Code | | Possible Settings | | IMPORTANT |
|---|---|---|---|---|
| No. | Name | Lenze | Selection | |
| C08 | Configuration - Relay output | 1 | Relay is energized if<br>0 Ready<br>1 Fault<br>2 Motor is running<br>3 Motor is running - CW rotation<br>4 Motor is running - CCW rotation<br>5 Output frequency = 0 Hz<br>6 Frequency setpoint reached<br>7 Threshold (C17) exceeded<br>8 Current limit (motor or generator mode) reached<br>9 Feedback within min/max alarm (d46, d47) range<br>10 Feedback outside min/max alarm (d46, d47) range | |
| C10 | Minimum output frequency | 0.0 | 0.0 {Hz} 500 | • Output frequency at 0% analog setpoint<br>• C10 not active for fixed setpoints or setpoint selection via c40 |
| C11 | Maximum output frequency | 50.0 | 7.5 {Hz} 500 | • Output frequency at 100% analog setpoint<br>• C11 is never exceeded |
| | | | **WARNING!**<br>Consult motor/machine manufacturer before operating above rated frequency. Overspeeding the motor/machine may cause damage to equipment and injury to personnel! | |
| C12 | Acceleration time 1 | 5.0 | 0.0 {s} 999 | • C12 = frequency change 0 Hz...C11<br>• C13 = frequency change C11...0 Hz<br>• For S-ramp accel/decel, adjust c82 |
| C13 | Deceleration time 1 | 5.0 | 0.0 {s} 999 | |
| C14 | Operating Mode | 2 | 0 Linear characteristic with Auto-Boost<br>1 Square-law characteristic with Auto-Boost<br>2 Linear characteristic with constant $V_{min}$ boost<br>3 Square-law characteristic with constant $V_{min}$ boost | • Linear characteristic: for standard applications<br>• Square-law characteristic: for fans and pumps with square-law load characteristic<br>• Auto boost: load-dependent output voltage for low-loss operation |
| C15 | V/f reference point | 50.0 | 25.0 {Hz} 999<br>Set the rated motor frequency (nameplate) for standard applications | 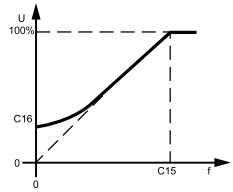 <br>smd006 |
| C16 | $V_{min}$ boost (optimization of torque behavior) | 6.0 | 0.0 {%} 40.0<br>Set **after** commissioning: The unloaded motor should run at slip frequency (approx. 5 Hz), increase C16 until motor current (C54) = 0.8 x rated motor current | |
| C17 | Frequency threshold ($Q_{min}$) | 0.0 | 0.0 {Hz} 500 | See C08, selection 7<br>Reference: setpoint |

| Code | | Possible Settings | | IMPORTANT |
|---|---|---|---|---|
| No. | Name | Lenze | Selection | |
| C18 | Chopper frequency | 2 | 0 4 kHz<br>1 6 kHz<br>2 8 kHz<br>3 10 kHz | • As chopper frequency is increased, motor noise is decreased<br>• Observe derating in Section 2.2<br>• Automatic derating to 4 kHz at 1.2 x $I_r$ |
| C21 | Slip compensation | 0.0 | 0.0 {%} 40.0 | Change C21 until the motor speed no longer changes between no load and maximum load |
| C22 | Current limit | 150 | 30 {%} 150<br>Reference: ***smd*** rated output current | • When the limit value is reached, either the acceleration time increases or the output frequency decreases |
| C24 | Accel boost | 0.0 | 0.0 {%} 20.0 | Accel boost is only active during acceleration |
| C31 | Analog input dead band | 0 | 0 Enabled<br>1 Disabled | C31 = 0 activates dead band for analog input. When analog signal is within dead band, controller's output = 0.0 Hz and display will read StP |
| C34 | Configuration - analog input | 0 | 0 0...10 V<br>1 0...5 V<br>2 0...20 mA<br>3 4...20 mA<br>4 4...20 mA monitored | Will trigger Sd5 fault if signal falls below 2 mA |
| C36 | Voltage - DC injection brake (DCB) | 4.0 | 0.0 {%} 50.0 | • See CE1...CE3 and c06<br>• Confirm motor suitability for use with DC braking |
| C37 | Fixed setpoint 1 (JOG 1) | 20.0 | 0.0 {Hz} 999 | When PI is active (see d38), C37...C39 are fixed PI setpoints |
| C38 | Fixed setpoint 2 (JOG 2) | 30.0 | 0.0 {Hz} 999 | |
| C39 | Fixed setpoint 3 (JOG 3) | 40.0 | 0.0 {Hz} 999 | |
| C46 | Frequency setpoint | | 0.0 {Hz} 500 | Display: Setpoint via analog input, function UP/DOWN |
| C50 | Output frequency | | 0.0 {Hz} 500 | Display |
| C53 | DC bus voltage | | 0.0 {%} 255 | Display |
| C54 | Motor current | | 0.0 {%} 255 | Display |
| C59 | PI feedback | | c86 {%} c87 | Display |
| C70 | Proportional gain | 5.0 | 0.0 {%} 99.9 | |
| C71 | Integral gain | 0.0 | 0.0 {s} 99.9 | |
| C94 | User password | 0 | 0 999<br>Changing from "0" (no password), value will start at 763 | When set to a value other than 0, must enter password at C00 to access parameters |
| C99 | Software version | | | Display, format: x.yz |

| Code | | Possible Settings | | IMPORTANT |
|---|---|---|---|---|
| No. | Name | Lenze | Selection | |
| c01 | Acceleration time 2 | 5.0 | 0.0 {s} 999 | • Activated using CE1...CE3<br>• c01 = frequency change 0 Hz...C11<br>• c03 = frequency change C11...0 Hz<br>• For S-ramp accel/decel, adjust c82 |
| c03 | Deceleration time 2 | 5.0 | 0.0 {s} 999 | |
| c06 | Holding time - automatic DC injection brake (Auto-DCB) | 0.0 | 0.0 {s} 999<br>0.0 = not active<br>999 = continuous brake | • Automatic motor braking below 0.1 Hz by means of motor DC current for the entire holding time (afterwards: U, V, W inhibited)<br>• Confirm motor suitability for use with DC braking |
| c20 | $I^2t$ switch-off (thermal motor monitoring) | 100 | 30 {%} 100<br>100% = ***smd*** rated output current | • Triggers OC6 fault when motor current exceeds c20 for too long<br>c20 = motor current rating / ***smd*** output rating x 100<br>Example: if motor = 6.4amps and ***smd*** = 7.0amps, then c20 = 91% |
| | | ⚠ | **WARNING!**<br>Maximum setting is rated motor current (see nameplate). Does not provide full motor protection! | |
| c38 | Actual PI setpoint | | c86 c87 | Display |
| c40 | Frequency setpoint via keys ▲▼ | 0.0 | 0.0 {Hz} 500 | Only active if C01 = 1 |
| c42 | Start condition (with mains on) | 1 | 0 Start after LOW-HIGH change at terminal 28<br>1 Auto start if terminal 28 = HIGH | See also c70 |
| | | ⚠ | **WARNING!**<br>Automatic starting/restarting may cause damage to equipment and/or injury to personnel! Automatic starting/restarting should only be used on equipment that is inaccessible to personnel. | |
| c60 | Mode selection for c61 | 0 | 0 Monitoring only<br>1 Monitoring and editing | c60 = 1 allows the keys ▲▼ to adjust speed setpoint (c40) while monitoring c61 |
| c61 | Present status/error | | status/error message | • Display<br>• Refer to Section 5 for explanation of status and error messages |
| c62 | Last error | | error message | |
| c63 | Last error but one | | | |
| c70 | Configuration TRIP reset (error reset) | 0 | 0 TRIP reset after LOW-HIGH change at terminal 28, mains switching, or after LOW-HIGH change at digital input "TRIP reset" | |
| | | | 1 Auto-TRIP reset | • Auto-TRIP reset after the time set in c71<br>• More than 8 errors in 10 minutes will trigger rSt fault |
| | | ⚠ | **WARNING!**<br>Automatic starting/restarting may cause damage to equipment and/or injury to personnel! Automatic starting/restarting should only be used on equipment that is inaccessible to personnel. | |

| Code | | Possible Settings | | IMPORTANT |
|---|---|---|---|---|
| No. | Name | Lenze | Selection | |
| c71 | Auto-TRIP reset delay | 0.0 | 0.0 {s} 60.0 | See c70 |
| c78 | Operating time counter | | Display<br>Total time in status “Start” | 0...999 h: format xxx<br>1000...9999 h: format x.xx (x1000)<br>10000...99999 h: format xx.x (x1000) |
| c79 | Mains connection time counter | | Display<br>Total time of mains = on | |
| c81 | PI setpoint | 0.0 | c86 c87 | |
| c82 | S-ramp integration time | 0.0 | 0.0 {s} 50.0 | • c82 = 0.0: Linear accel/decel ramp<br>• c82 > 0.0: Adjusts S-ramp curve for smoother ramp |
| c86 | Minimum feedback | 0.0 | 0.0 999 | • Select feedback signal at C34<br>• If feedback is reverse-acting, set c86>c87 |
| c87 | Maximum feedback | 100 | 0.0 999 | |
| d25 | PI setpoint accel/ decel | 5.0 | 0.0 {s} 999 | Sets rate of change for PI setpoint |
| d38 | PI mode | 0 | 0 PI disabled | |
| | | | 1 PI enabled: normal-acting | When feedback (terminal 8) exceeds setpoint, speed decreases |
| | | | 2 PI enabled: reverse-acting | When feedback (terminal 8) exceeds setpoint, speed increases |
| d46 | Feedback minimum alarm | 0.0 | 0.0 999 | See C08, selections 9 and 10 |
| d47 | Feedback maximum alarm | 0.0 | 0.0 999 | |

# 5 Troubleshooting and fault elimination

| Status | | Cause | Remedy |
|---|---|---|---|
| e.g. 50.0 | Present output frequency | Trouble free operation | |
| OFF | Stop (outputs U, V, W inhibited) | LOW signal at terminal 28 | Set terminal 28 to HIGH |
| StP | Output frequency = 0 Hz (outputs U, V, W inhibited) | Setpoint = 0 Hz (C31 = 0) | Setpoint selection |
| | | Quick stop activated through digital input | Deactivate Quick stop |
| br | DC-injection brake active | DC-injection brake activated<br>• via digital input<br>• automatically | Deactivate DC-injection brake<br>• digital input = LOW<br>• automatically after holding time c06 has expired |
| CL | Current limit reached | Controllable overload | Automatically (see C22) |
| LU | Undervoltage on DC bus | Mains voltage too low | Check mains voltage |
| dEC | Overvoltage on DC bus during deceleration (warning) | Excessively short deceleration time (C13, c03) | Automatically if overvoltage < 1 s, OU, if overvoltage > 1 s |
| nEd | No access to code | Can only be changed when the controller is in OFF | Set terminal 28 to LOW |

| Error | | Cause | Remedy (1) |
|---|---|---|---|
| cF | Data on EPM not valid | Data not valid for controller | • Use EPM providing valid data<br>• Load Lenze setting |
| CF | | Data error | |
| GF | | OEM data not valid | |
| F1 | EPM error | EPM missing or defective | Power down and replace EPM |
| CFG | Digital inputs not uniquely assigned | E1...E3 assigned with the same digital signals | Each digital signal can only be used once |
| | | Either just “UP” or “DOWN” used | Assign the missing digital signal to a second terminal |
| EEr | External error | Digital input “TRIP set” is active | Remove external error |
| F2...F0, uF | Internal fault | | Please contact Lenze |
| LC | Automatic start inhibited | c42 = 0 | LOW-HIGH signal change at terminal 28 |
| OC1 | Short-circuit or overload | Short-circuit | Find reason for short-circuit; check motor cable |
| | | Excessive capacitive charging current of the motor cable | Use shorter motor cables with lower charging current |
| | | Acceleration time (C12, c01) too short | • Increase acceleration time<br>• Check controller selection |
| | | Defective motor cable | Check wiring |
| | | Internal fault in motor | Check motor |
| | | Frequent and long overload | Check controller selection |

(1) The drive can only be restarted if the error message has been reset; see c70

| Error | | Cause | Remedy (1) |
|---|---|---|---|
| OC2 | Earth fault | Grounded motor phase | Check motor/motor cable |
| | | Excessive capacitive charging current of the motor cable | Use shorter motor cables with lower charging current |
| OC6 | Motor overload ($I^2t$ overload) | Motor is thermally overloaded, due to:<br>• impermissable continuous current<br>• frequent or too long acceleration processes | • Check controller selection<br>• Check setting of c20 |
| OH | Controller overtemperature | Controller too hot inside | • Reduce controller load<br>• Improve cooling |
| OU | Overvoltage on DC bus | Mains voltage too high | Check mains voltage |
| | | Excessively short deceleration time or motor in generator mode | Increase deceleration time or use dynamic braking option |
| | | Earth leakage on the motor side | Check motor/motor cable (separate motor from controller) |
| rSt | Faulty auto-TRIP reset | More than 8 errors in 10 minutes | Depends on the error |
| Sd5 | Loss of 4-20 mA reference | 4-20 mA signal is below 2 mA (C34 = 4) | Check signal/signal wire |
| SF | Single phase fault | A mains phase has been lost | Check mains voltage |

(1) The drive can only be restarted if the error message has been reset; see c70